REV :	DESCRIPTION :	BY	DATE
T1	PRELIMINARY	Neil Zeng	2014/03/19

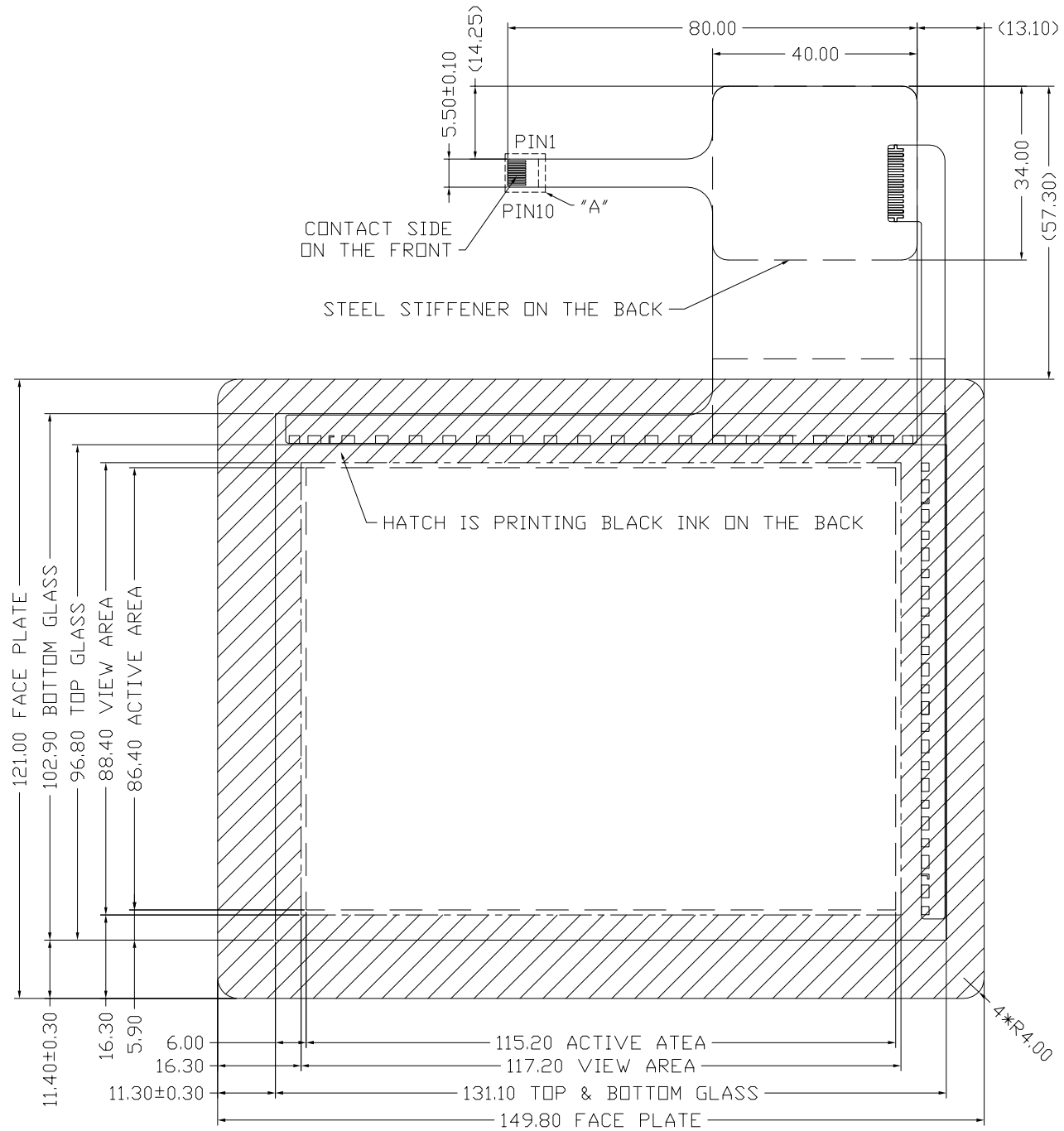

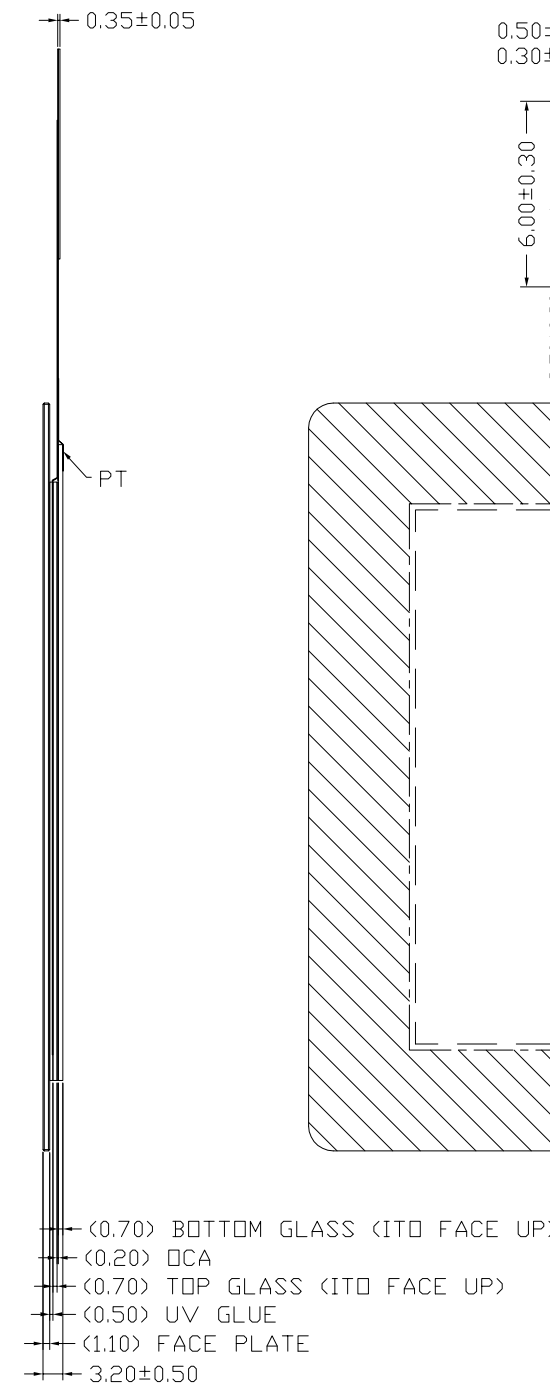

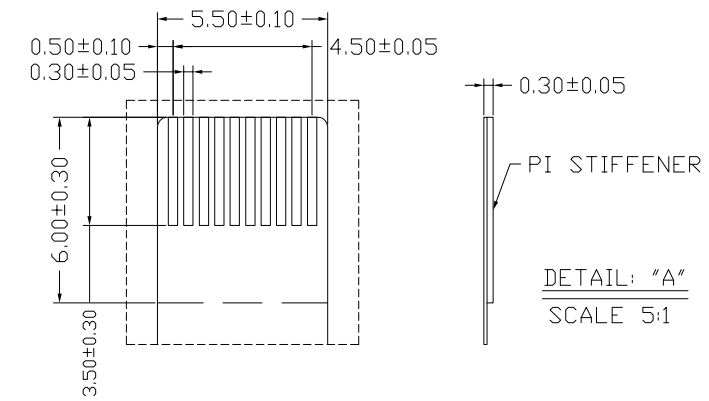

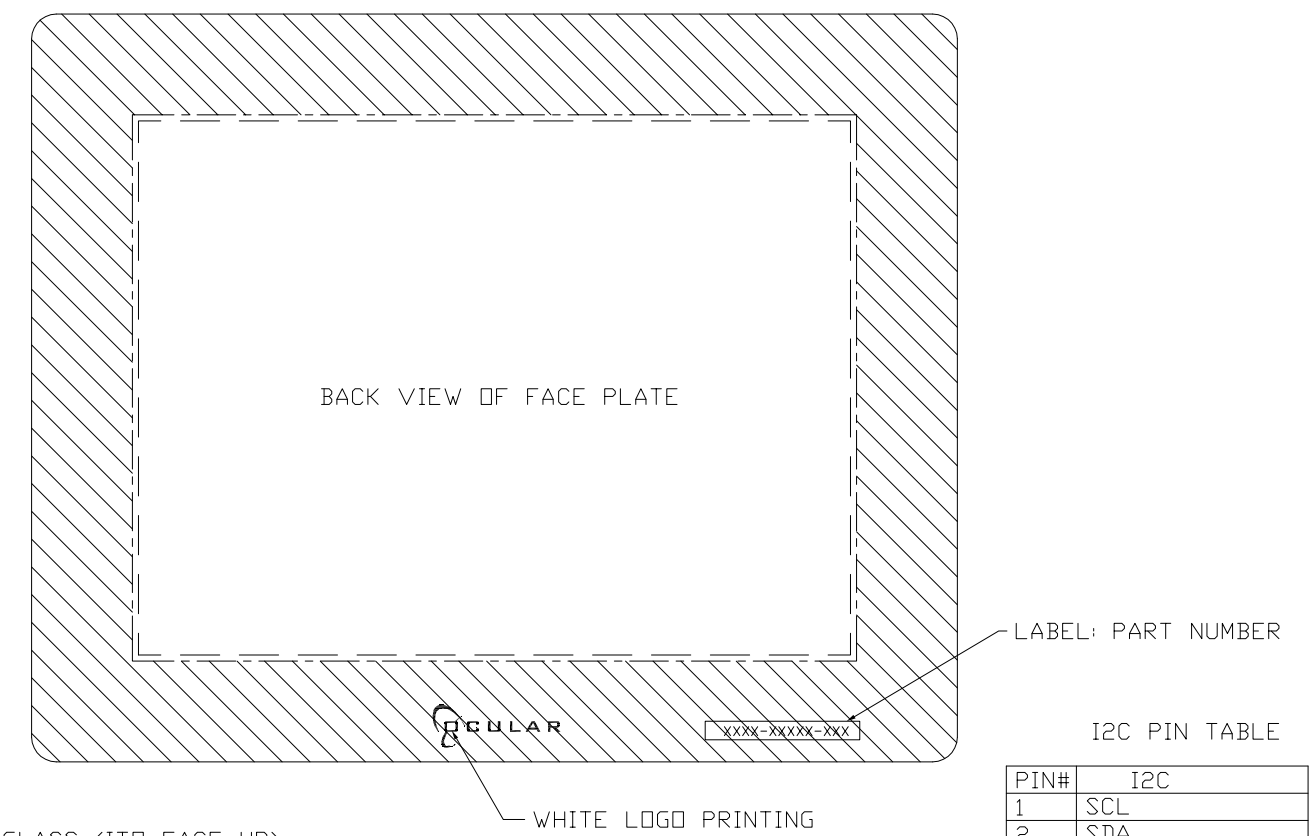

I2C PIN TABLE

PIN#	I2C
1	SCL
2	SDA
3	/RESET
4	/CHG
5	NC
6	GND
7	VDD(3.3V)
8	NC
9	NC
10	NC

NOTES:

1. ALL DIMENSIONS IN MM.
2. OPERATING TEMPERATURE: -20°C TO 80°C
3. STORAGE TEMPERATURE: -30°C TO 80°C
4. FPC BENDING RADIUS IS R1.0MM MIN
5. ALL MATERIALS MUST BE ROHS COMPLIANT
6. FACE PLATE: SODA-LIME GLASS, NO SHARP CORNERS OR EDGES.
7. (*) DIMENSION FOR REFERENCE
8. THE COMPATIBLE MOLEX FPC CONNECTOR IS 52745-1097 OR EQUIVALENT

OCULAR. DISPLAY YOUR ADVANTAGE

THIS DOCUMENT IS CONFIDENTIAL PROPRIETARY INFORMATION OF OCULAR CORPORATION AND SHALL NOT BE DISCLOSED OR COPIED OR USED FOR ANY PURPOSE OTHER THAN FOR WHICH IT IS SPECIFICALLY FURNISHED WITHOUT THE PRIOR WRITTEN CONSENT OF OCULAR CORPORATION.

UNLESS OTHERWISE NOTED :		ENGR MANAGER :	DATE :
		CHECKED BY : Jacky Li	DATE : 2014/03/19
UNITS	DECIMAL	DWN BY : Neil Zeng	DATE : 2014/03/19
INCHES [mm]	.XXX[.XX] ±0.008[0.20]	DRAWING TITLE : F057-0224S-195	
ANGLES	±0.5°	DRAWING No. : F057-0224S-195	REV : T1
THIRD ANGLE PROJECTION		SCALE 1 : 1	SHEET : 1 OF 1